LTR	Zone	REVISION RECORD / Description	DWN/CHK	DATE	LTR	Zone	REVISION RECORD / Description	DWN/CHK	DATE
1		New Release		DEC/05/07					
2									

DRAWING NUMBER: J63__15574B-M40

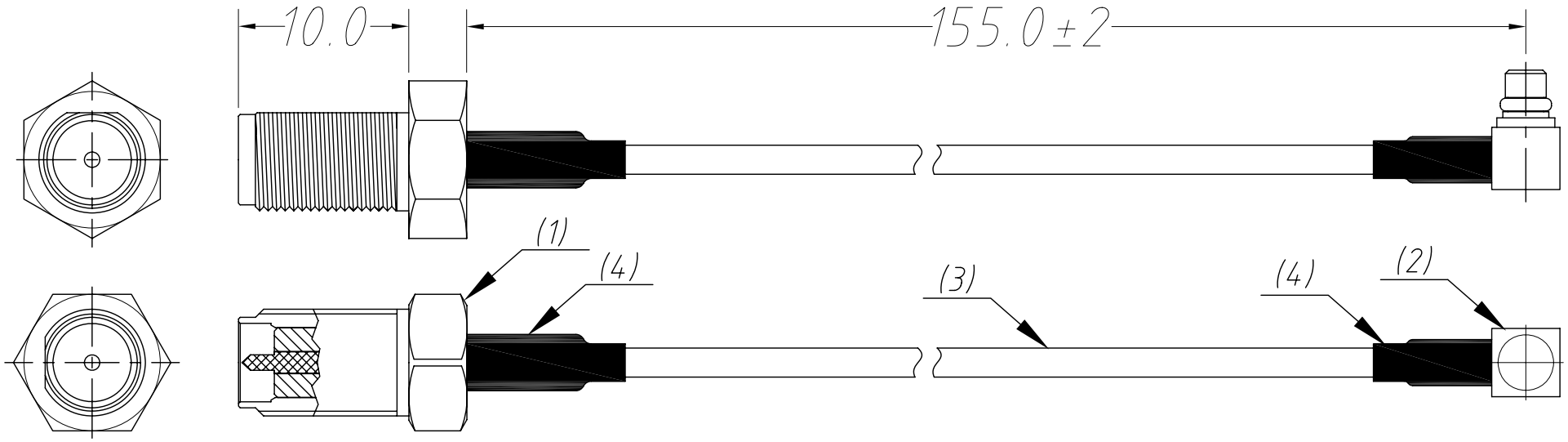

Accessorise Parts

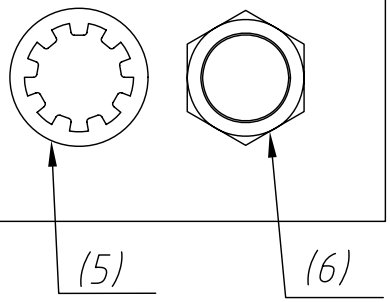

NO	DESCRIPTION	Q'ty	MATERIAL	Part Number
6	NUT GOLD		Brass	
5	TOOTH WASHER GOLD	1	Brass	
4	SHRING TUBE Ø3.5 * t0.3	2		M05-035003-BL
3	CABLE RG174U PVC BLACK			M02-RG174U-BL
2	CN MMCX PLUG R/A 137/178 CTXX-5090-178	1	Brass	M01-011011-01
1	SMA RP Jack 牙長10mm FOR 316/174/TAK	1	Brass	

UNIT mm	APVD	DESCRIPTION: JC SMA RP Jack-RG174 MMCX L155mm	
MATERIAL SEE NOTE	CHK	DIMENSION: 1 PLC ±0.1, 2 PLC ±0.3, 3 PLC ±0.10, ANGLES ±1°	PART NUMBER J63__15574B-M40 / REV 1
FINISH SEE NOTE	DWN csh		SIZE A4 / SCALE 1/1 / SHEET 1 OF 1